A New Direction in Mixed-Signal

XR1009, XR2009

0.2mA, 35MHz Rail-to-Rail Amplifiers

General Description

The XR1009 (single) and XR2009 (dual) are ultra-low power, low cost, voltage feedback amplifiers. These amplifiers use only 208µA of supply current and are designed to operate from a supply range of 2.5V to 5.5V (±1.25 to ±2.75). The input voltage range extends 300mV below the negative rail and 1.2V below the positive rail.

The XR1009 and XR2009 offer superior dynamic performance with a 35MHz small signal bandwidth and 27V/µs slew rate. The combination of low power, high bandwidth, and rail-to-rail performance make the XR1009 and XR2009 well suited for battery-powered communication/ computing systems.

FEATURES

- 208µA supply current
- 35MHz bandwidth
- Input voltage range with 5V supply: -0.3V to 3.8V
- Output voltage range with 5V supply: 0.08V to 4.88V
- 27V/µs slew rate
- 21nV/√Hz input voltage noise
- 13mA linear output current
- Fully specified at 2.7V and 5V supplies
- Replaces MAX4281

APPLICATIONS

- Portable/battery-powered applications
- Mobile communications, cell phones, pagers
- ADC buffer
- Active filters
- Portable test instruments
- Signal conditioning
- Medical equipment
- Portable medical instrumentation
- Interactive whiteboards

The product (or products) mentioned in this data sheet are no longer being manufactured and may not be ordered (OBS)

Frequency Response

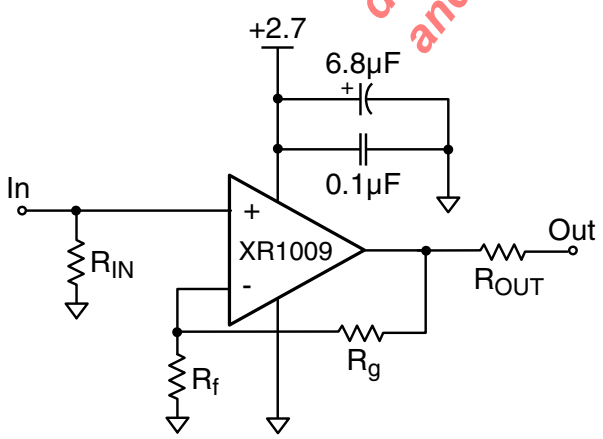

Output Swing vs. R_L

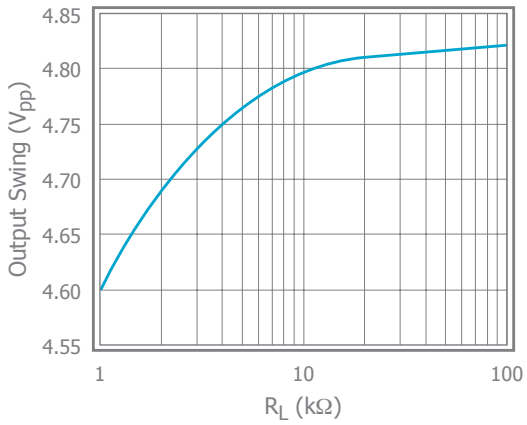

Absolute Maximum Ratings

Stresses beyond the limits listed below may cause permanent damage to the device. Exposure to any Absolute Maximum Rating condition for extended periods may affect device reliability and lifetime.

V_S ..... 0V to 6V

V_{IN} ..... $-V_S$ - 0.5V to $+V_S$ +0.5V

Continuous Output Current..... -30mA to +30mA

Operating Conditions

Supply Voltage Range .....2.5 to 5.5V

Operating Temperature Range .....-40°C to 125°C

Junction Temperature .....150°C

Storage Temperature Range.....-65°C to 150°C

Lead Temperature (Soldering, 10s) .....260°C

Package Thermal Resistance

θ_{JA} (TSOT23-5) .....215°C/W

θ_{JA} (SOIC-8) .....150°C/W

θ_{JA} (MSOP-8) ..... 200°C/W

Package thermal resistance (θ_{JA}), JEDEC standard, multi-layer test boards, still air.

ESD Protection

XR1009 (HBM) 2kV

XR2009 (HBM) 2.5kV

ESD Rating for HBM (Human Body Model).

The product (or products) mentioned in this data sheet are no longer being manufactured and may not be ordered (OBS)

Electrical Characteristics at +2.7V

T_A = 25°C, V_S = +2.7V, R_f = R_g = 2.5kΩ, R_L = 2kΩ to V_S/2; G = 2; unless otherwise noted.

Symbol	Parameter	Conditions	Min	Typ	Max	Units
Frequency Domain Response						
$UGBW_{SS}$	Unity Gain -3dB Bandwidth	G = +1, V_{OUT} = 0.05V_{pp}, R_f = 0		28		MHz
BW_{SS}	-3dB Bandwidth	G = +2, V_{OUT} < 0.2V_{pp}		15		MHz
BW_{LS}	Large Signal Bandwidth	G = +2, V_{OUT} = 2V_{pp}		7		MHz
GBWP	Gain Bandwidth Product	G = +11, V_{OUT} = 0.2V_{pp}		16		MHz
Time Domain Response						
t_R, t_F	Rise and Fall Time	V_{OUT} = 0.2V step; (10% to 90%)		16		ns
t_S	Settling Time to 0.1%	V_{OUT} = 1V step		140		ns
OS	Overshoot	V_{OUT} = 1V step		1		%
SR	Slew Rate	G = -1, 2V step		20		V/µs
Distortion/Noise Response						
HD2	2nd Harmonic Distortion	100kHz, V_{OUT} = 1V_{pp}		-85		dBc
HD3	3rd Harmonic Distortion	100kHz, V_{OUT} = 1V_{pp}		-63		dBc
THD	Total Harmonic Distortion	100kHz, V_{OUT} = 1V_{pp}		62		dB
e_n	Input Voltage Noise	>10kHz		23		nV/√Hz
XTALK	Crosstalk	100kHz, V_{OUT} = 0.2V_{pp}		98		dB
DC Performance						
V_{IO}	Input Offset Voltage			0.8		mV
d_{VIO}	Average Drift			11		µV/°C
I_B	Input Bias Current			0.37		µA
dI_B	Average Drift			1		nA/°C
I_{OS}	Input Offset Current			8		nA
PSRR	Power Supply Rejection Ratio	DC	56	60		dB
A_{OL}	Open Loop Gain	V_{OUT} = V_S / 2		65		dB
I_S	Supply Current	per channel		185		µA
Input Characteristics						
R_{IN}	Input Resistance	Non-inverting		>10		MΩ
C_{IN}	Input Capacitance			1.4		pF
CMIR	Common Mode Input Range			-0.3 to 1.5		V
CMRR	Common Mode Rejection Ratio	DC, V_{CM} = 0V to V_S - 1.5V		92		dB
Output Characteristics						
V_{OUT}	Output Voltage Swing	R_L = 2kΩ to V_S / 2		0.08 to 2.6		V
		R_L = 10kΩ to V_S / 2		0.06 to 2.62		V
I_{OUT}	Output Current			±8		mA
I_{SC}	Short Circuit Current			±12.5		mA

The product (or products) mentioned in this data sheet are no longer being manufactured and may not be ordered (OBS)

Electrical Characteristics at +5V

T_A = 25°C, V_S = +5V, R_f = R_g = 2.5kΩ, R_L = 2kΩ to V_S/2; G = 2; unless otherwise noted.

Symbol	Parameter	Conditions	Min	Typ	Max	Units
Frequency Domain Response						
$UGBW_{SS}$	Unity Gain -3dB Bandwidth	G = +1, V_{OUT} = 0.05V_{pp}, R_f = 0		35		MHz
BW_{SS}	-3dB Bandwidth	G = +2, V_{OUT} < 0.2V_{pp}		18		MHz
BW_{LS}	Large Signal Bandwidth	G = +2, V_{OUT} = 2V_{pp}		8		MHz
GBWP	Gain Bandwidth Product	G = +11, V_{OUT} = 0.2V_{pp}		20		MHz
Time Domain Response						
t_R, t_F	Rise and Fall Time	V_{OUT} = 0.2V step; (10% to 90%)		13		ns
t_S	Settling Time to 0.1%	V_{OUT} = 1V step		140		ns
OS	Overshoot	V_{OUT} = 1V step		1		%
SR	Slew Rate	G = -1, 2V step		27		V/µs
Distortion/Noise Response						
HD2	2nd Harmonic Distortion	100kHz, V_{OUT} = 2V_{pp}		-78		dBc
HD3	3rd Harmonic Distortion	100kHz, V_{OUT} = 2V_{pp}		-66		dBc
THD	Total Harmonic Distortion	100kHz, V_{OUT} = 2V_{pp}		65		dB
e_n	Input Voltage Noise	>10kHz		21		nV/√Hz
XTALK	Crosstalk	100kHz, V_{OUT} = 0.2V_{pp}		98		dB
DC Performance						
V_{IO}	Input Offset Voltage		-5	-1.5	5	mV
d_{VIO}	Average Drift			20		µV/°C
I_B	Input Bias Current		-1.3	0.37	1.3	µA
dI_B	Average Drift			1		nA/°C
I_{OS}	Input Offset Current			7	130	nA
PSRR	Power Supply Rejection Ratio	DC	56	60		dB
A_{OL}	Open Loop Gain	V_{OUT} = V_S / 2	56	62		dB
I_S	Supply Current	per channel		208	260	µA
Input Characteristics						
R_{IN}	Input Resistance	Non-inverting		>10		MΩ
C_{IN}	Input Capacitance			1.2		pF
CMIR	Common Mode Input Range			-0.3 to 3.8		V
CMRR	Common Mode Rejection Ratio	DC, V_{CM} = 0V to V_S - 1.5V	65	95		dB
Output Characteristics						
V_{OUT}	Output Voltage Swing	R_L = 2kΩ to V_S / 2	0.2 to 4.7	0.1 to 4.8		V
		R_L = 10kΩ to V_S / 2		0.08 to 4.88		V
I_{OUT}	Output Current			±8.5		mA
I_{SC}	Short Circuit Current			±13		mA

The product (or products) mentioned in this data sheet are no longer being manufactured and may not be ordered (OBS)

XR1009 Pin Configurations

TSOT-5

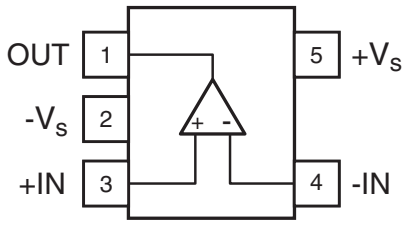

SOIC-8

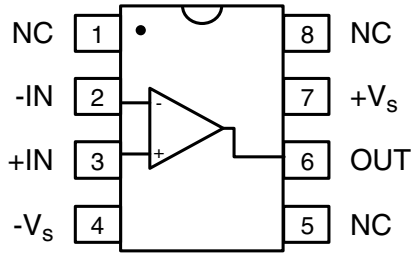

XR1009 Pin Assignments

TSOT-5

Pin No.	Pin Name	Description
1	OUT	Output
2	$-V_S$	Negative supply
3	+IN	Positive input
4	-IN	Negative input
5	$+V_S$	Positive supply

SOIC-8

Pin No.	Pin Name	Description
1	NC	No Connect
2	-IN	Negative input
3	+IN	Positive input
4	$-V_S$	Negative supply
5	NC	No Connect
6	OUT	Output
7	$+V_S$	Positive supply
8	NC	No Connect

The product (or products) mentioned in this data sheet are no longer being manufactured and may not be ordered (OBS)

XR2009 Pin Configuration

SOIC-8 / MSOP-8

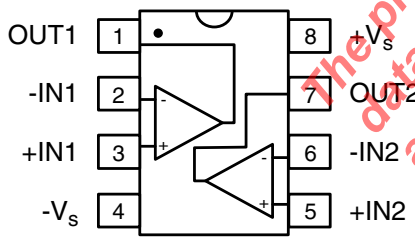

XR2009 Pin Assignments

SOIC-8 / MSOP-8

Pin No.	Pin Name	Description
1	OUT1	Output, channel 1
2	-IN1	Negative input, channel 1
3	+IN1	Positive input, channel 1
4	$-V_S$	Negative supply
5	+IN2	Positive input, channel 2
6	-IN2	Negative input, channel 2
7	OUT2	Output, channel 2
8	$+V_S$	Positive supply

Typical Performance Characteristics

T_A = 25°C, V_S = +5V, R_f = R_g = 2.5kΩ, R_L = 2kΩ to V_S/2; G = 2; unless otherwise noted.

Non-Inverting Frequency Response at V_S = 5V

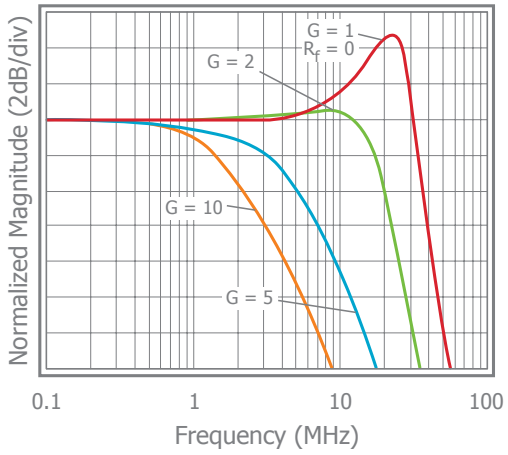

Inverting Frequency Response at V_S = 5V

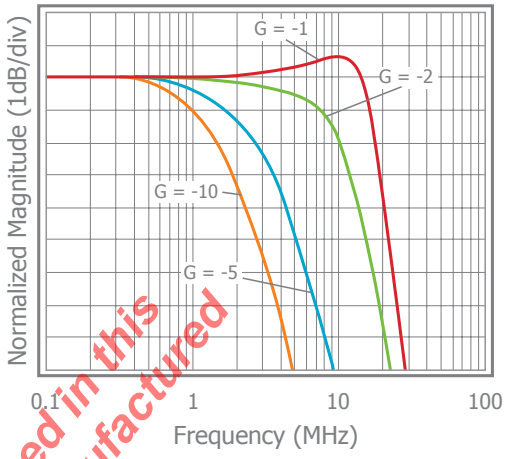

Non-Inverting Frequency Response at V_S = 2.7V

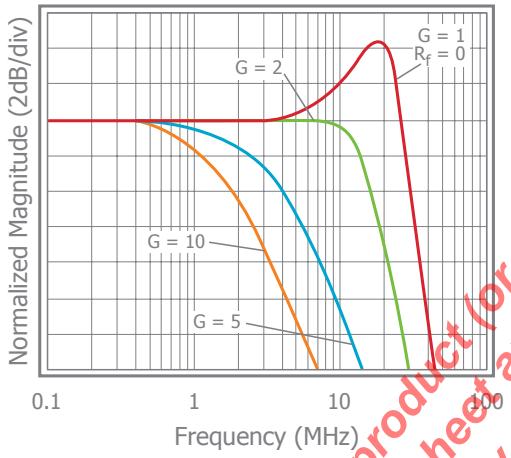

Inverting Frequency Response at V_S = 2.7V

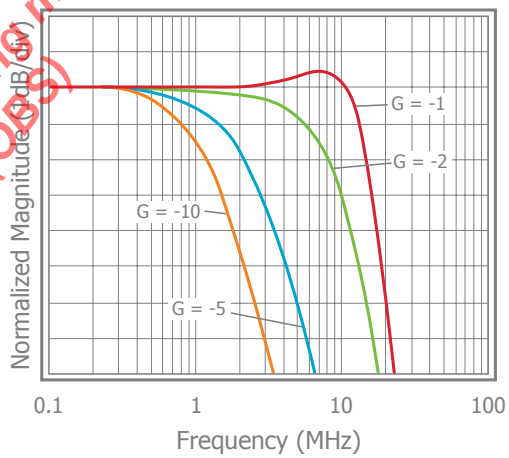

Frequency Response vs. V_{OUT}

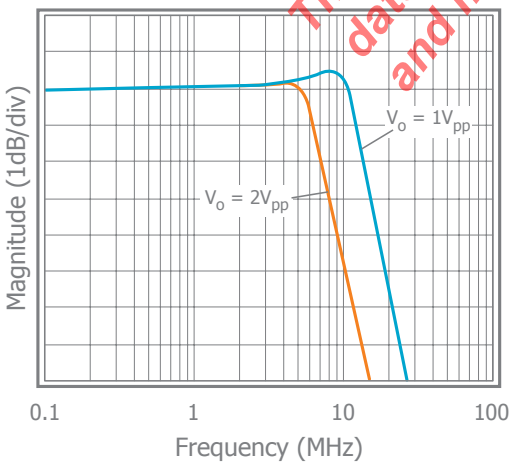

Open Loop Gain & Phase vs. Frequency

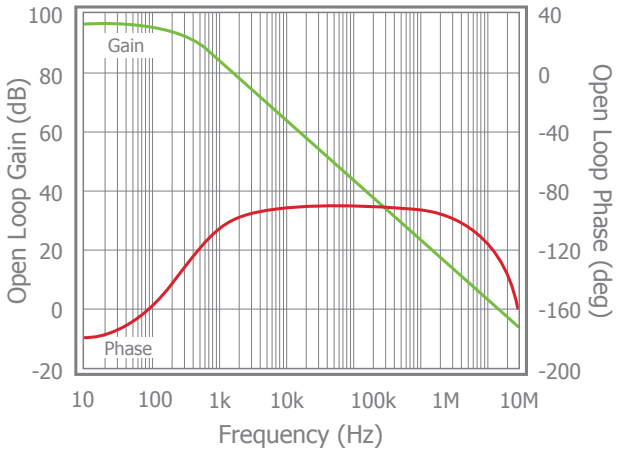

The product (or products) mentioned in this data sheet are no longer being manufactured and may not be ordered (OBS)

Typical Performance Characteristics

T_A = 25°C, V_S = +5V, R_f = R_g = 2.5kΩ, R_L = 2kΩ to V_S/2; G = 2; unless otherwise noted.

2nd & 3rd Harmonic Distortion at V_S = 5V

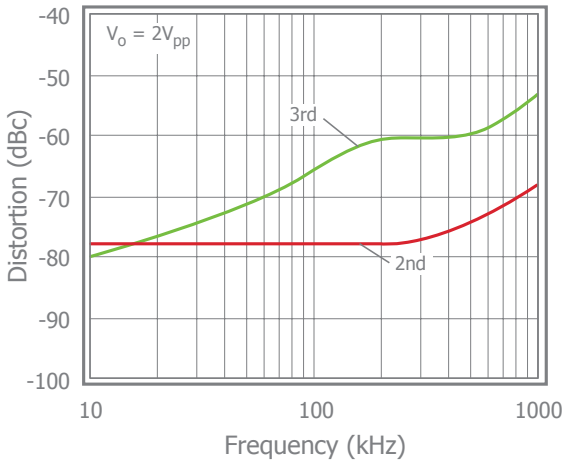

2nd & 3rd Harmonic Distortion at V_S = 2.7V

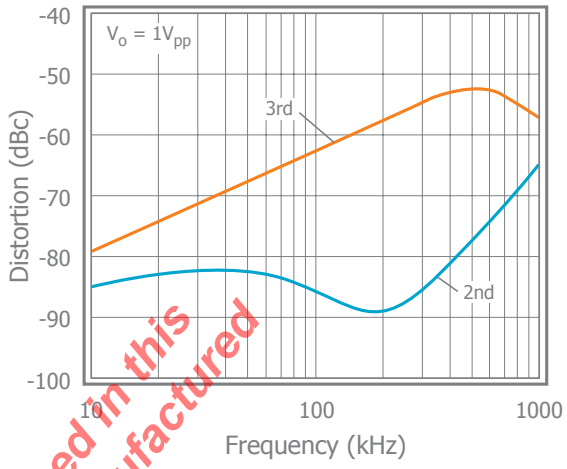

CMRR

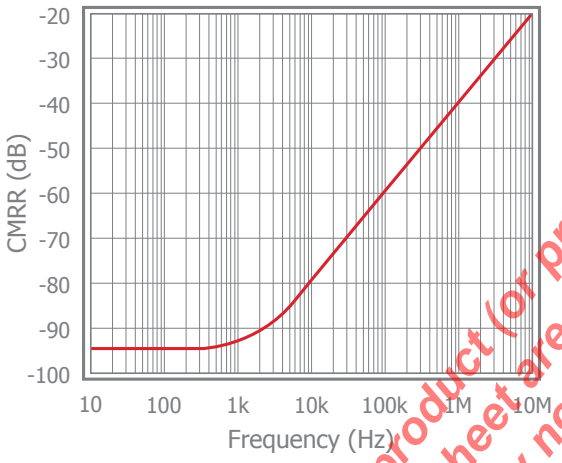

PSRR

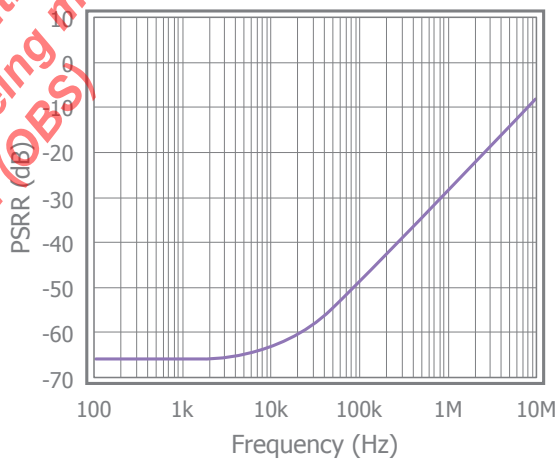

Small Signal Pulse Response

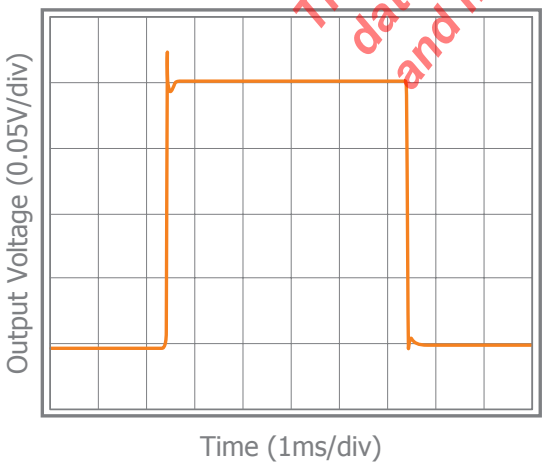

Large Signal Pulse Response

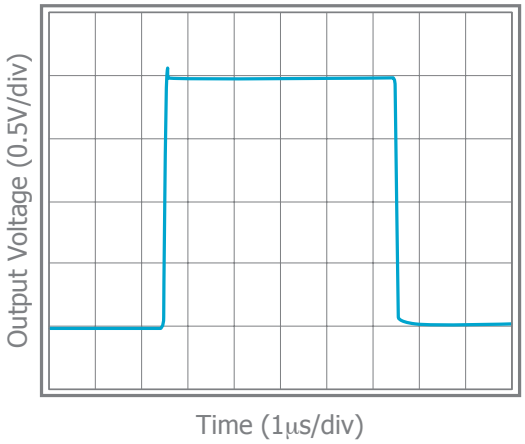

The product (or products) mentioned in this data sheet are no longer being manufactured and may not be ordered (OBS)

Typical Performance Characteristics

T_A = 25°C, V_S = +5V, R_f = R_g = 2.5kΩ, R_L = 2kΩ to V_S/2; G = 2; unless otherwise noted.

Output Swing vs. R_L

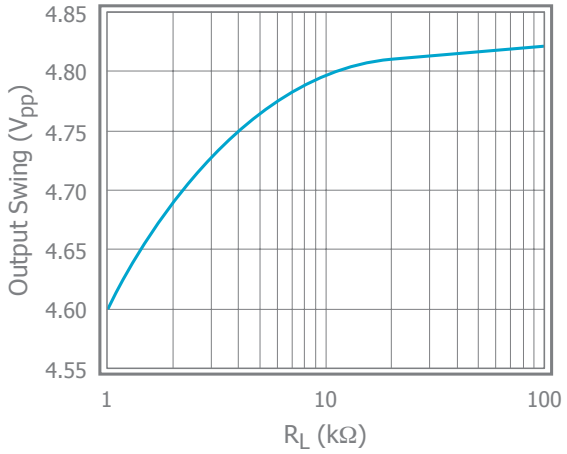

Input Voltage Noise

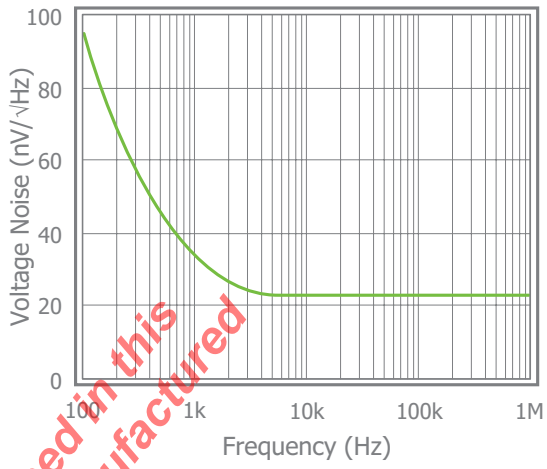

The product (or products) mentioned in this data sheet are no longer being manufactured and may not be ordered (OBS)

Application Information

General Description

The XR1009 and XR2009 are a single supply, general purpose, voltage-feedback amplifiers fabricated on a complementary bipolar process. The XR1009 offers 35MHz unity gain bandwidth, 27V/µs slew rate, and only 208µA supply current. It features a rail-to-rail output stage and is unity gain stable.

The design utilizes a patent pending topology that provides increased slew rate performance. The common mode input range extends to 300mV below ground and to 1.2V below Vs. Exceeding these values will not cause phase reversal. However, if the input voltage exceeds the rails by more than 0.5V, the input ESD devices will begin to conduct. The output will stay at the rail during this overdrive condition.

The design uses a Darlington output stage. The output stage is short circuit protected and offers “soft” saturation protection that improves recovery time.

Figures 1, 2, and 3 illustrate typical circuit configurations for non-inverting, inverting, and unity gain topologies for dual supply applications. They show the recommended bypass capacitor values and overall closed loop gain equations. Figure 4 shows the typical non-inverting gain circuit for single supply applications.

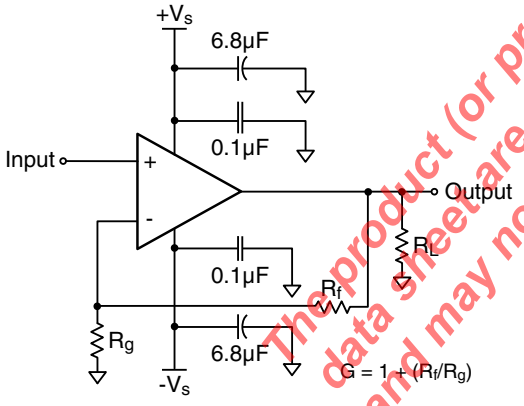

Figure 1: Typical Non-Inverting Gain Circuit

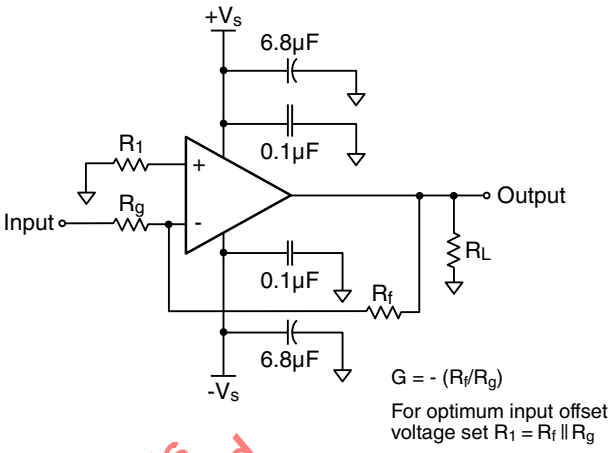

Figure 2: Typical Inverting Gain Circuit

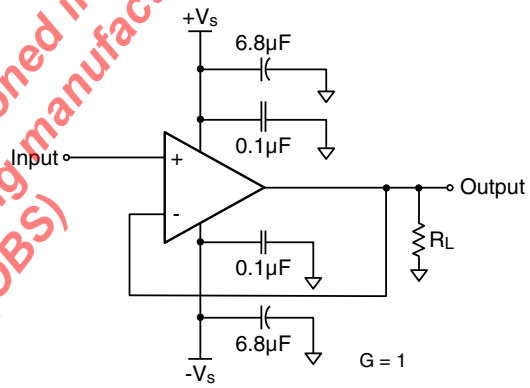

Figure 3: Unity Gain Circuit

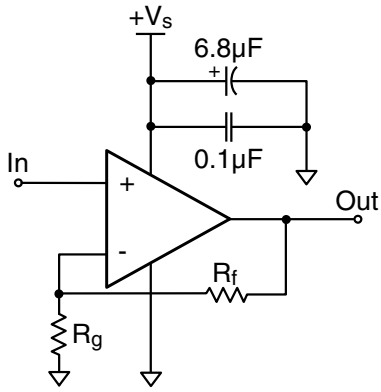

Figure 4: Single Supply Non-Inverting Gain Circuit

The product (or products) mentioned in this data sheet are no longer being manufactured and may not be ordered (OBS)

Power Dissipation

Power dissipation should not be a factor when operating under the stated 2kΩ load condition. However, applications with low impedance, DC coupled loads should be analyzed to ensure that maximum allowed junction temperature is not exceeded. Guidelines listed below can be used to verify that the particular application will not cause the device to operate beyond it's intended operating range.

Maximum power levels are set by the absolute maximum junction rating of 150°C. To calculate the junction temperature, the package thermal resistance value $Theta_{JA}$ (θ_{JA}) is used along with the total die power dissipation.

$$T_{Junction} = T_{Ambient} + (\theta_{JA} \times P_D)$$

Where $T_{Ambient}$ is the temperature of the working environment.

In order to determine P_D, the power dissipated in the load needs to be subtracted from the total power delivered by the supplies.

$$P_D = P_{supply} - P_{load}$$

Supply power is calculated by the standard power equation.

$$P_{supply} = V_{supply} \times I_{RMSsupply}$$

$$V_{supply} = V_{S+} - V_{S-}$$

Power delivered to a purely resistive load is:

$$P_{load} = ((V_{load})_{RMS}^2)/Rload_{eff}$$

The effective load resistor ($Rload_{eff}$) will need to include the effect of the feedback network. For instance,

$Rload_{eff}$ in Figure 3 would be calculated as:

$$R_L \parallel (R_f + R_g)$$

These measurements are basic and are relatively easy to perform with standard lab equipment. For design purposes however, prior knowledge of actual signal levels and load impedance is needed to determine the dissipated power. Here, P_D can be found from

$$P_D = P_{Quiescent} + P_{Dynamic} - P_{load}$$

Quiescent power can be derived from the specified I_S values along with known supply voltage, V_{supply}. Load power can be calculated as above with the desired signal amplitudes using:

$$(V_{load})_{RMS} = V_{peak} / \sqrt{2}$$

$$(I_{load})_{RMS} = (V_{load})_{RMS} / Rload_{eff}$$

The dynamic power is focused primarily within the output stage driving the load. This value can be calculated as:

$$P_{Dynamic} = (V_{S+} - V_{load})_{RMS} \times (I_{load})_{RMS}$$

Assuming the load is referenced in the middle of the power rails or $V_{supply}/2$.

The XR1009 is short circuit protected. However, this may not guarantee that the maximum junction temperature (+150°C) is not exceeded under all conditions. Figure 5 shows the maximum safe power dissipation in the package vs. the ambient temperature for the packages available.

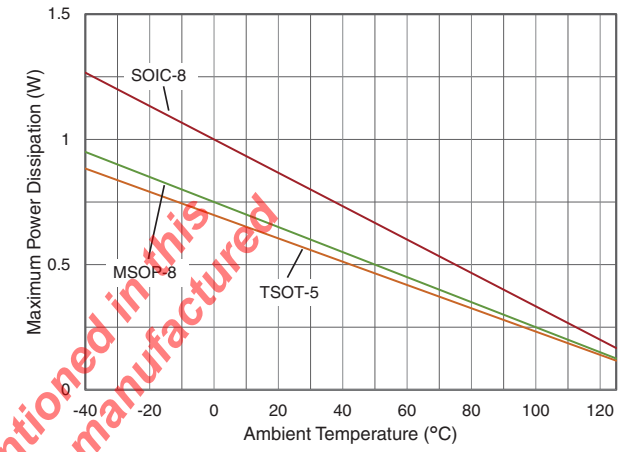

Figure 5. Maximum Power Derating

Driving Capacitive Loads

Increased phase delay at the output due to capacitive loading can cause ringing, peaking in the frequency response, and possible unstable behavior. Use a series resistance, R_S, between the amplifier and the load to help improve stability and settling performance. Refer to Figure 6.

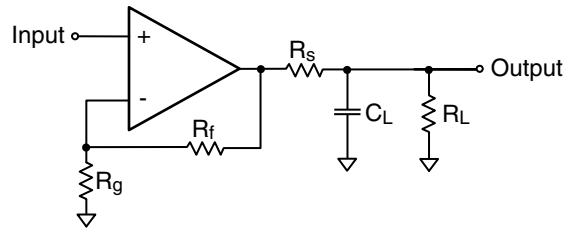

Figure 6. Addition of R_S for Driving Capacitive Loads

Overdrive Recovery

For an amplifier, an overdrive condition occurs when the output and/or input ranges are exceeded. The recovery time varies based on whether the input or output is overdriven and by how much the ranges are exceeded. The XR1009, and XR2009 will typically recover in less than 20ns from an overdrive condition.

The product (or products) mentioned in this data sheet are no longer being manufactured and may not be ordered (OBS)

Layout Considerations

General layout and supply bypassing play major roles in high frequency performance. Exar has evaluation boards to use as a guide for high frequency layout and as an aid in device testing and characterization. Follow the steps below as a basis for high frequency layout:

- Include 6.8µF and 0.1µF ceramic capacitors for power supply decoupling
- Place the 6.8µF capacitor within 0.75 inches of the power pin
- Place the 0.1µF capacitor within 0.1 inches of the power pin
- Remove the ground plane under and around the part, especially near the input and output pins to reduce parasitic capacitance
- Minimize all trace lengths to reduce series inductances

Refer to the evaluation board layouts below for more information.

Evaluation Board Information

The following evaluation boards are available to aid in the testing and layout of these devices:

Evaluation Board #	Products
CEB002	XR1009 in TSOT
CEB003	XR1009 in SOIC
CEB006	XR2009 in SOIC
CEB010	XR2009 in MSOP

Evaluation Board Schematics

Evaluation board schematics and layouts are shown in Figures 9-18 These evaluation boards are built for dual-supply operation. Follow these steps to use the board in a single-supply application:

1. Short $-V_S$ to ground.
2. Use C3 and C4, if the $-V_S$ pin of the amplifier is not directly connected to the ground plane.

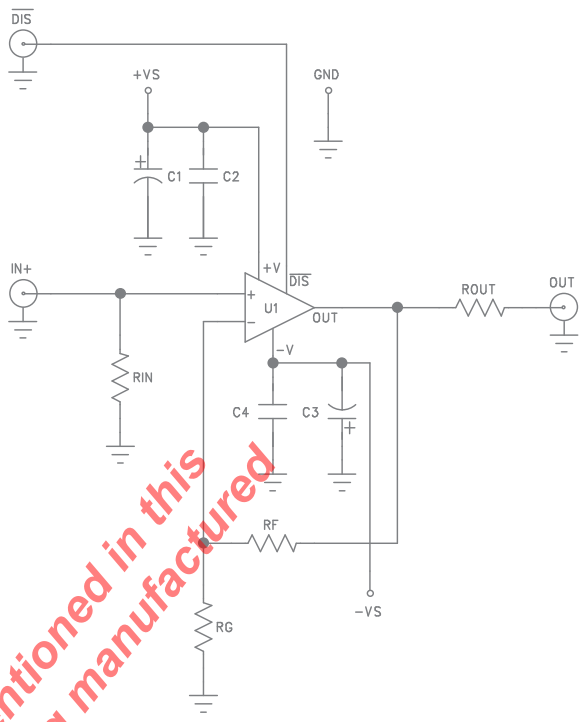

Figure 9. CEB002 & CEB003 Schematic

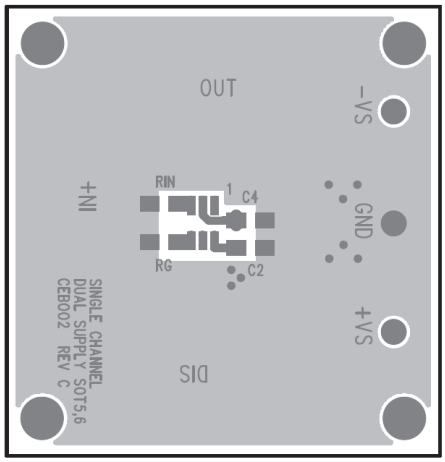

Figure 10. CEB002 Top View

The product (or products) mentioned in this data sheet are no longer being manufactured and may not be ordered (OBS)

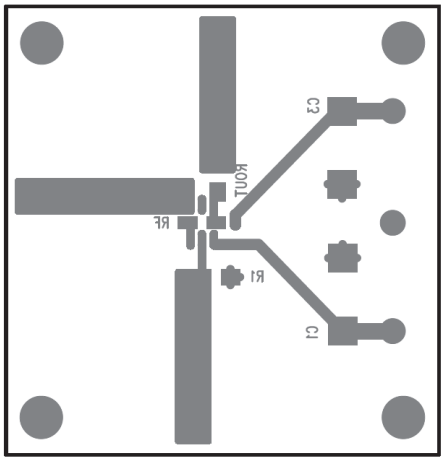

Figure 11. CEB002 Bottom View

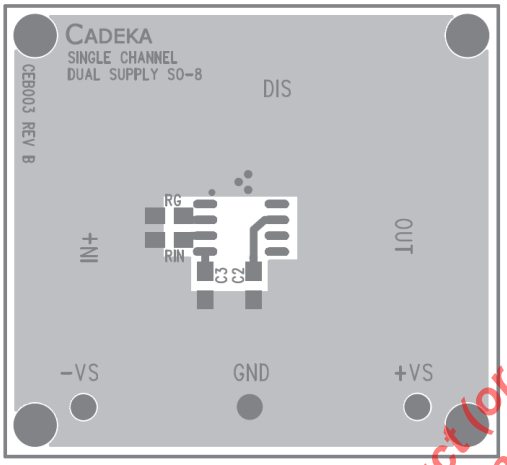

Figure 12. CEB003 Top View

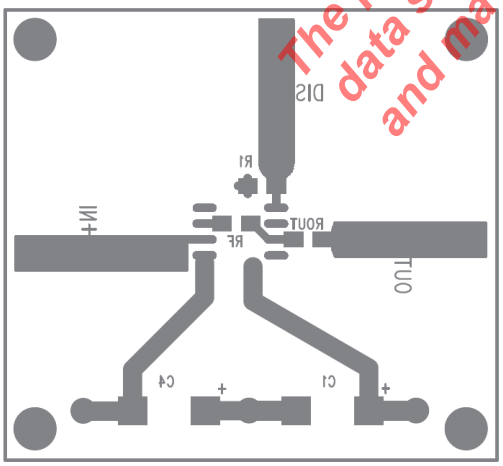

Figure 13. CEB003 Bottom View

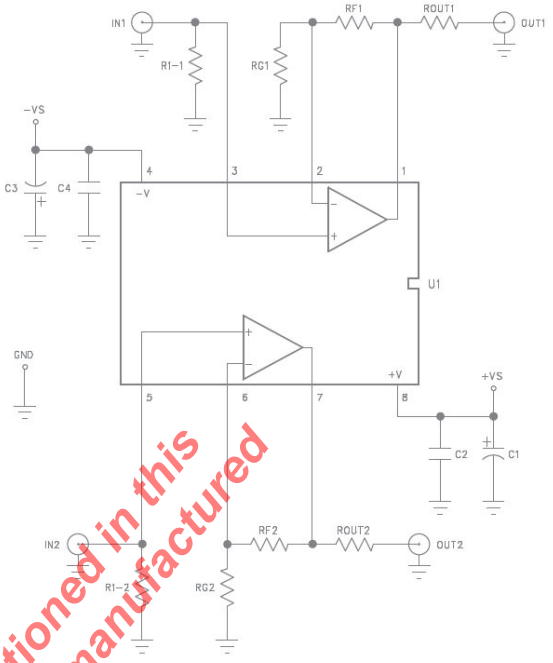

Figure 14. CEB006 & CEB010 Schematic

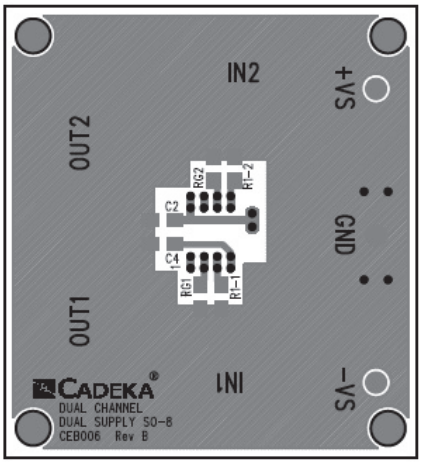

Figure 15. CEB006 Top View

The product(or products) mentioned in this data sheet are no longer being manufactured and may not be ordered (OBS)

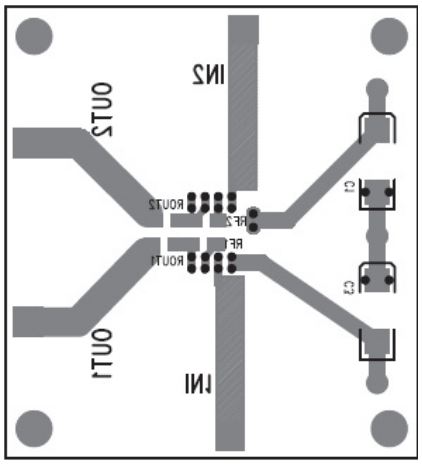

Figure 16. CEB006 Bottom View

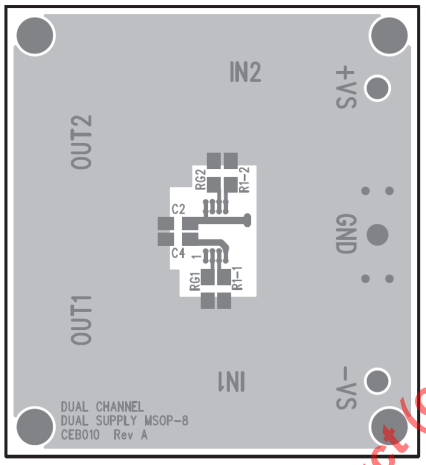

Figure 17. CEB010 Top View

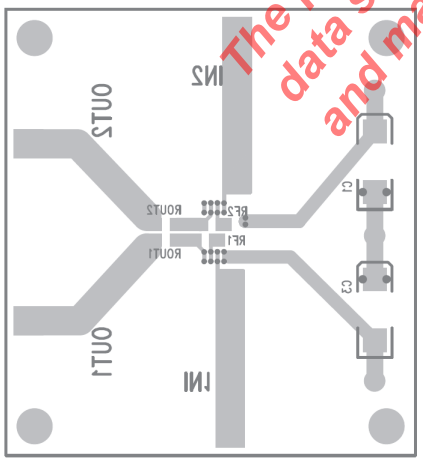

Figure 18. CEB010 Bottom View

The product (or products) mentioned in this data sheet are no longer being manufactured and may not be ordered (OBS)

Mechanical Dimensions

TSOT-5 Package

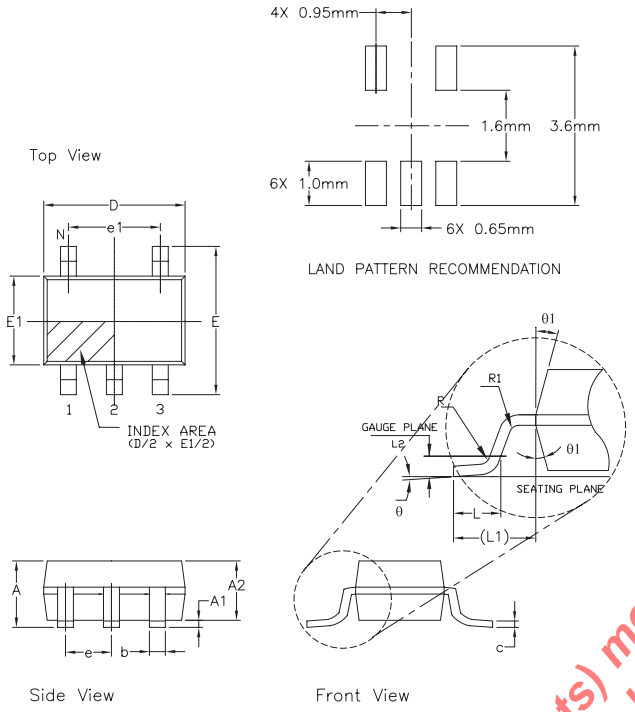

5 Pin TSOT (OPTION 2)						
SYMBOLS	DIMENSION IN MM (Control Unit)			DIMENSION IN INCH (Reference Unit)		
	MIN	NOM	MAX	MIN	NOM	MAX
A	0.75	—	0.80	0.030	—	0.031
A1	0.00	—	0.05	0.000	—	0.002
A2	0.70	0.75	0.78	0.028	0.030	0.031
b	0.35	—	0.50	0.012	—	0.020
c	0.10	—	0.20	0.003	—	0.008
D	2.90 BSC			0.114 BSC		
E	2.80 BSC			0.110 BSC		
E1	1.60 BSC			0.063 BSC		
e	0.95 BSC			0.038 BSC		
e1	1.90 BSC			0.075 BSC		
L	0.37	0.45	0.60	0.012	0.018	0.024
L1	0.60 REF			0.024 REF		
L2	0.25 BSC			0.010 BSC		
R	0.10	—	—	0.004	—	—
R1	0.10	—	0.25	0.004	—	0.010
θ	0°	4°	8°	0°	4°	8°
θ1	4°	10°	12°	4°	10°	12°
N	5			5		

MSOP-8 Package

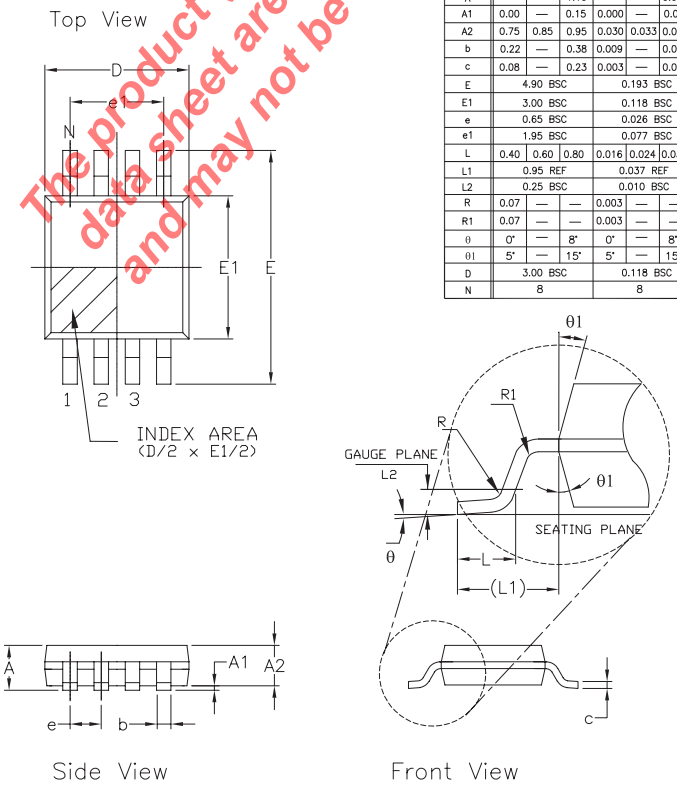

8 Pin MSOP JEDEC MO-187 Variation AA						
SYMBOLS	DIMENSIONS IN MM (Control Unit)			DIMENSIONS IN INCH (Reference Unit)		
	MIN	NOM	MAX	MIN	NOM	MAX
A	—	—	1.10	—	—	0.043
A1	0.00	—	0.15	0.000	—	0.006
A2	0.75	0.85	0.95	0.030	0.033	0.037
b	0.22	—	0.38	0.009	—	0.015
c	0.08	—	0.23	0.003	—	0.009
E	4.90 BSC			0.193 BSC		
E1	3.00 BSC			0.118 BSC		
e	0.65 BSC			0.026 BSC		
e1	1.95 BSC			0.077 BSC		
L	0.40	0.60	0.80	0.016	0.024	0.031
L1	0.95 REF			0.037 REF		
L2	0.25 BSC			0.010 BSC		
R	0.07	—	—	0.003	—	—
R1	0.07	—	—	0.003	—	—
θ	0°	—	8°	0°	—	8°
θ1	5°	—	15°	5°	—	15°
D	3.00 BSC			0.118 BSC		
N	8			8		

The product (or products) mentioned in this data sheet are no longer being manufactured and may not be ordered (OBS)

SOIC-8 Package

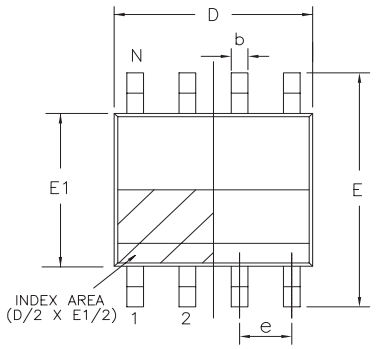

Top View

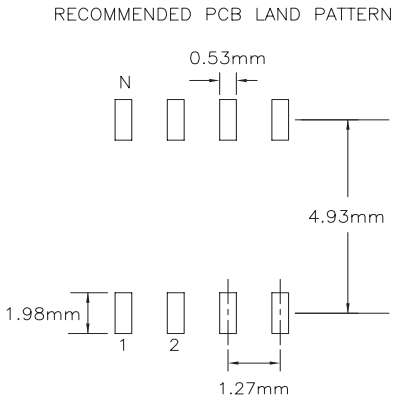

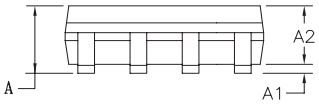

Side View

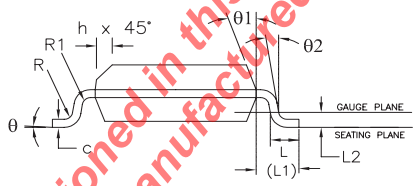

Front View

8 Pin SOICN JEDEC MS-012 Variation AA						
SYMBOLS	DIMENSIONS IN MM (Control Unit)			DIMENSIONS IN INCH (Reference Unit)		
	MIN	NOM	MAX	MIN	NOM	MAX
A	1.35	—	1.75	0.053	—	0.069
A1	0.10	—	0.25	0.004	—	0.010
A2	1.25	—	1.65	0.049	—	0.065
b	0.31	—	0.51	0.012	—	0.020
c	0.17	—	0.25	0.007	—	0.010
E	6.00 BSC			0.236 BSC		
E1	3.90 BSC			0.154 BSC		
e	1.27 BSC			0.050 BSC		
h	0.25	—	0.50	0.010	—	0.020
L	0.40	—	1.27	0.016	—	0.050
L1	1.04 REF			0.041 REF		
L2	0.25 BSC			0.010 BSC		
R	0.07	—	—	0.003	—	—
R1	0.07	—	—	0.003	—	—
θ	0°	—	8°	0°	—	8°
θ1	5°	—	15°	5°	—	15°
θ2	0°	—	—	0°	—	—
D	4.90 BSC			0.193 BSC		
N	8			8		

The product (or product mentioned in this data sheet are no longer being manufactured and may not be ordered (OBS)

Ordering Information

Part Number	Package	Green	Operating Temperature Range	Packaging Quantity	Marking
XR1009 Ordering Information					
XR1009IST5X	TSOT-5	Yes	-40°C to +125°C	2.5k Tape & Reel	UC
XR1009IST5MTR	TSOT-5	Yes	-40°C to +125°C	250 Tape & Reel	UC
XR1009IST5EVB	Evaluation Board	N/A	N/A	N/A	N/A
XR1009ISO8X	SOIC-8	Yes	-40°C to +125°C	2.5k Tape & Reel	XR1009
XR1009ISO8MTR	SOIC-8	Yes	-40°C to +125°C	250 Tape & Reel	XR1009
XR1009ISO8EVB	Evaluation Board	N/A	N/A	N/A	N/A
XR2009 Ordering Information					
XR2009ISO8X	SOIC-8	Yes	-40°C to +125°C	2.5k Tape & Reel	XR2009
XR2009ISO8MTR	SOIC-8	Yes	-40°C to +125°C	250 Tape & Reel	XR2009
XR2009ISO8EVB	Evaluation Board	N/A	N/A	N/A	N/A
XR2009IMP8X	MSOP-8	Yes	-40°C to +125°C	2.5k Tape & Reel	2009
XR2009IMP8MTR	MSOP-8	Yes	-40°C to +125°C	250 Tape & Reel	2009
XR2009IMP8EVB	Evaluation Board	N/A	N/A	N/A	N/A

Moisture sensitivity level for all parts is MSL-1.

Revision History

Revision	Date	Description
1A	June 2014	Initial Release [ECN 1426-10 I 06/24/14]
1B	Sept 2014	Added XR1009 ESD, increased operating temperature range, updated package outline drawings, and removed Preliminary note on XR1009. [ECN 1436-03 I 09/04/14]

The product (or products) mentioned in this data sheet are no longer being manufactured and may not be offered (OBS)

For Further Assistance:

Email: CustomerSupport@exar.com or HPATechSupport@exar.com

Exar Technical Documentation: http://www.exar.com/techdoc/

Exar Corporation Headquarters and Sales Offices
48760 Kato Road Tel.: +1 (510) 668-7000
Fremont, CA 94538 - USA Fax: +1 (510) 668-7001

A New Direction in Mixed-Signal

NOTICE

EXAR Corporation reserves the right to make changes to the products contained in this publication in order to improve design, performance or reliability. EXAR Corporation assumes no responsibility for the use of any circuits described herein, conveys no license under any patent or other right, and makes no representation that the circuits are free of patent infringement. Charts and schedules contained here in are only for illustration purposes and may vary depending upon a user's specific application. While the information in this publication has been carefully checked; no responsibility, however, is assumed for inaccuracies.

EXAR Corporation does not recommend the use of any of its products in life support applications where the failure or malfunction of the product can reasonably be expected to cause failure of the life support system or to significantly affect its safety or effectiveness. Products are not authorized for use in such applications unless EXAR Corporation receives, in writing, assurances to its satisfaction that: (a) the risk of injury or damage has been minimized; (b) the user assumes all such risks; (c) potential liability of EXAR Corporation is adequately protected under the circumstances.

Reproduction, in part or whole, without the prior written consent of EXAR Corporation is prohibited.