XR-T3590

Single Chip V.35 Transceiver

November 1998-1

FEATURES

- Single device provides three receivers and transmitters fully compliant with electrical specification of V.35 interface (receiver differential inputs are V.11 compliant)
- Supports all V.35 clock and data signals in DTE and DCE modes of operation
- Transmitters are short circuit protected
- Supports a maximum data rate of 10MBPS up to 100 meters
- Full compliance with ITU–T V.35 specification
- Supports mirrored diagnostic loop backs in DTE and DCE modes of operation
- Allows disabling all receivers, or all drivers, or all receivers and drivers
- During the disable mode the outputs are placed in Hi-Z state
- Maximum power dissipation 540mW (All active mode)
- Maximum power consumption 600mW (All drivers loaded)
- Current consumption during shut down mode is less than 300µA

APPLICATIONS

- Bridges and Routers
- Modems
- Digital Service Units (DSUs)
- Multiplexers
- HDSL and ADSL equipment
- Inverse Multiplexers
- Workstations

The product (or products) mentioned in this data sheet are no longer being manufactured and may not be ordered (OBS)

GENERAL DESCRIPTION

XR-T3590 is a single chip device which contains three V.35 receivers and transmitters. This device by itself is sufficient to implement all the data and clock signals required for a V.35 interface. For the handshaking signals, separate RS-232 transceivers are necessary.

This device supports multiple modes of operation including DCE and DTE. Diagnostic loopbacks are supported both in the DCE and DTE modes. To accommodate diagnostics in both directions, a mirrored loopback is implemented. Both clock and data paths are looped back during the diagnostics mode. This feature can be invoked by applying appropriate patterns to SEL lines. (See *Table 1*.) For power management flexibility, all of the drivers and receivers can be placed in a shut down mode. For applications where only receivers are required, all the drivers can be disabled and vice versa. During disable mode the output drivers are placed in Hi-Z state.

The differential V.35 output drivers of this device are implemented using a current mode type design. This minimizes the number of external resistors required. Due to low voltage swing required in the current mode of operation, the emission in a typical V.35 interface using this device is minimized. Each transmitter and receiver would require an external resistor network consisting of 3 resistors for termination. This device does not require any large capacitors in addition to two 0.1µF decoupling caps needed across the power supplies. In order to reduce the number of external components, resistor network can be used to realize both the driver and receiver termination.

ORDERING INFORMATION

Part No.	Package	Operating Temperature Range
XR-T3590IP	24 Lead 600 Mil PDIP	-40°C to +85°C
XR-T3590ID	24 Lead 300 Mil JEDEC SOIC	-40°C to +85°C

©1998

EXAR Corporation, 48720 Kato Road, Fremont, CA 94538 ◆ (510) 668-7000 ◆ (510) 668-7017

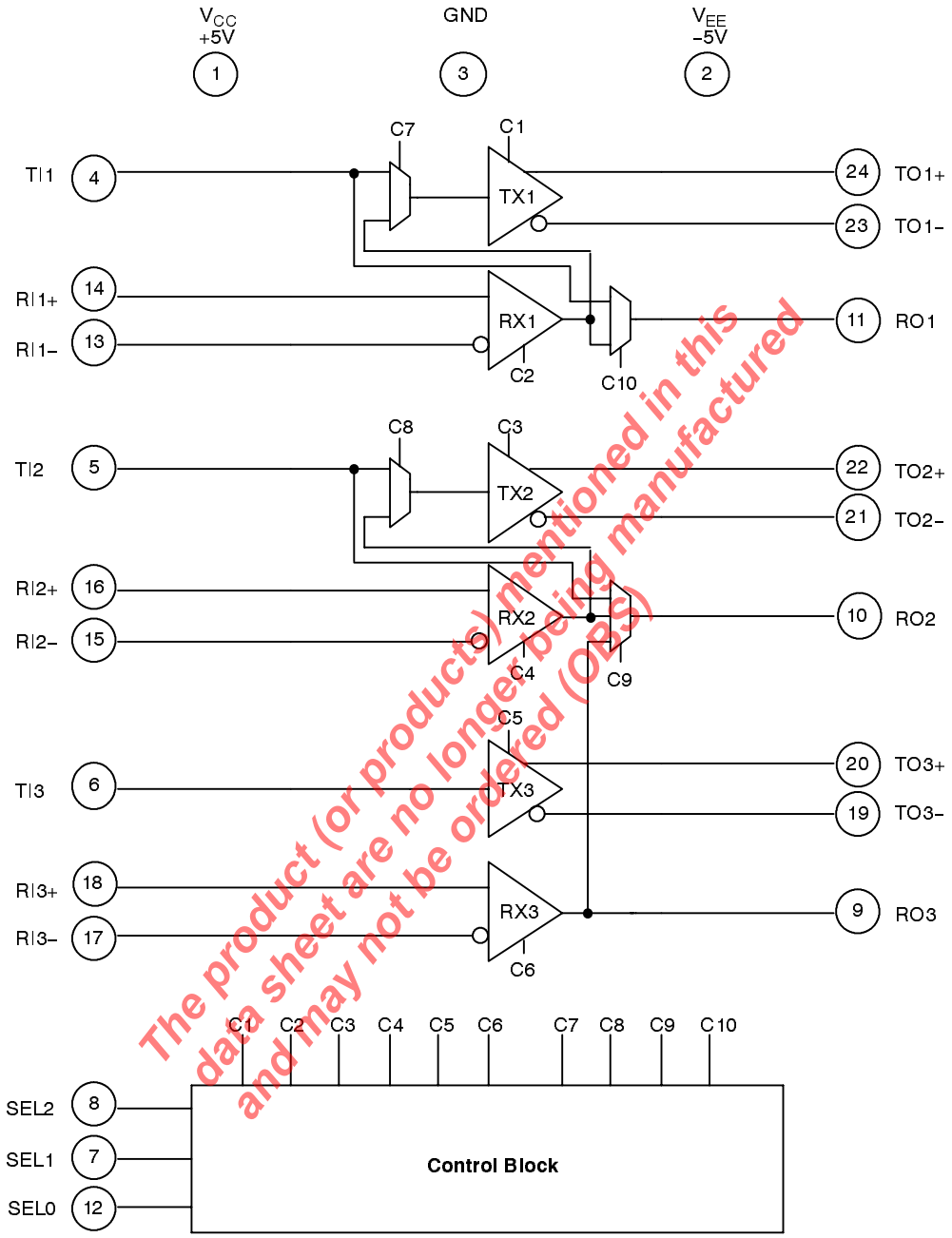

The product (or products) mentioned in this data sheet are no longer being manufactured and may not be ordered (OBS)

Figure 1. XR–T3590 Block Diagram

PIN CONFIGURATIONS

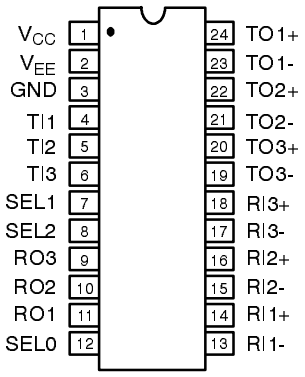

24 Lead PDIP (0.600")

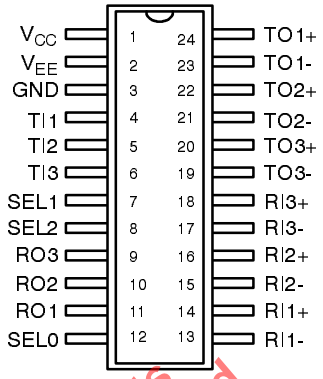

24 Lead SOIC (0.300")

PIN DESCRIPTION

Pin #	Symbol	Type	Signal	Description
1	V_{CC}			+5 V (±0.25 V).
2	V_{EE}			-5 V (±0.25 V).
3	GND			Ground.
4	TI1	I	TTL	Transmitter 1 input.
5	TI2	I	TTL	Transmitter 2 input.
6	TI3	I	TTL	Transmitter 3 input.
7	SEL1	I	TTL	Mode select 1. (see *Table 1* for details)
8	SEL2	I	TTL	Mode select 2. (see *Table 1* for details)
9	RO3	O	TTL	Receiver 3 output.
10	RO2	O	TTL	Receiver 2 output.
11	RO1	O	TTL	Receiver 1 output.
12	SEL0	I	TTL	Mode select 0. (see *Table 1* for details)
13	RI1-	I	V.35	Receiver 1 negative input.
14	RI1+	I	V.35	Receiver 1 positive input.
15	RI2-	I	V.35	Receiver 2 negative input.
16	RI2+	I	V.35	Receiver 2 positive input.
17	RI3-	I	V.35	Receiver 3 negative input.
18	RI3+	I	V.35	Receiver 3 positive input.
19	TO3-	O	V.35	Transmitter 3 negative output.
20	TO3+	O	V.35	Transmitter 3 positive output.
21	TO2-	O	V.35	Transmitter 2 negative output.
22	TO2+	O	V.35	Transmitter 2 positive output.
23	TO1-	O	V.35	Transmitter 1 negative output.
24	TO1+	O	V.35	Transmitter 1 positive output.

The product (or products) mentioned in this data sheet are no longer being manufactured and may not be ordered (OBS)

DC ELECTRICAL CHARACTERISTICS

Test Conditions: V_{CC} = **+5.0V** ± 5%, V_{EE}=**-5.0V** ± 5%, T_A = **25°C**[1],driver and receiver are enabled unless otherwise specified. (See *Figure 2.*)

Symbol	Parameter	Min.	Typ.	Max.	Unit	Conditions
$\|V_{OD}\|$	Transmitter Differential Output Voltage	***0.44***	0.55	***0.66***	V	$-4V \le V_{OS} \le +4V$
V_{OC}	Transmitter Common-Mode Output Voltage	***-0.3***	0	***+0.3***	V	V_{OS} = 0 V
I_{OH}	Transmitter Output High Current	**-12.6**	-11	***-9.4***	mA	
I_{OL}	Transmitter Output Low Current	**9.4**	11	**12.6**	mA	
I_{OZ}	Transmitter Output Leakage Current		±1	±100	µA	V_{TO+} = ±5V, V_{TO-} = ±5V While driver disabled
R_O	Transmitter Output Impedance		50		KΩ	
V_{TH}	Differential Receiver Input Threshold Voltage			*150*	mV	F=10 Mbps
V_{HYST}	Receiver Input Hysterisis		30		mV	V_{OS}=0V
I_{IN}	Receiver Input Current			***±0.4***	mA	$-5V \le V_{RI}+, V_{RI}- \le 5V$
R_{IN}	Receiver Input Impedance Differential		35		KΩ	$-5V \le V_{RI}+, V_{RI}- \le 5V$
V_{OH}	Receiver Output High Voltage	***3***	4.5		V	I_{OH}=-4mA
V_{OL}	Receiver Output Low Voltage		0.4	***0.8***	V	I_{OL}=4mA
I_{OSC}	Receiver Output Short-Circuit Current		13		mA	$0 \le V_O \le V_{CC}$
I_{OZR}	Receiver Three-State Output Current			***±10***	µA	Receiver Disabled $0 \le V_O \le V_{CC}$
V_{IH}	Logic Input High Voltage	**2**			V	TIn, SEL2-0
V_{IL}	Logic Input Low Voltage			***0.8***	V	TIn, SEL2-0
I_{IN}	Logic Input Current		***±2.5***	***±10***	µA	TIn, SEL2-0
I_{CC}	V_{CC} Supply Current		36 250	***50***	mA µA	All On, Loaded, F=10Mbps All Off
I_{EE}	V_{EE} Supply Current		–38 --180	***–50***	mA µA	All On All Off

The product (or products) mentioned in this data sheet are no longer being manufactured and may not be ordered (OBS)

Notes

[1] *All currents flowing into the device pins are marked positive. All current flowing out of the device pins are marked negative.* ***Bold face parameters*** *are covered by production test and guaranteed over the operating temperature range. Italicized parameters are guaranteed over the full operating temperature range.*

Specifications are subject to change without notice

AC ELECTRICAL CHARACTERISTICS

Test Conditions: V_{CC} = **+5.0V** ± 5%, V_{EE}=**-5.0V** ± 5%, T_A = **25°C**[1], driver and receiver are enabled unless otherwise specified.

Symbol	Parameter	Min.	Typ.	Max.	Unit	Conditions
T_R, T_F	Transmitter Rise or Fall Time		5	***30***	ns	V_{OS}=0V
T_{TPLH}	Transmitter Input to Output Propagation Delay		25	***40***	ns	V_{OS}=0V
T_{TPHL}	Transmitter Input to Output Propagation Delay		27	***40***	ns	V_{OS}=0V
T_{OSKEW}	Transmitter Output to Output Skew		***3***		ns	V_{OS}=0V
T_{RPLH}	Receiver Input to Output Propagation Delay (rising)		37	***50***	ns	V_{OS}=0V
T_{RPHL}	Receiver Input to Output Propagation Delay (falling)		35	***50***	ns	V_{OS}=0V
T_{ISKEW}	Differential Receiver Skew (T_{RPLH} – T_{RPHL})		***2***		ns	V_{OS}=0V
T_{ZL}	Receiver Enable to Output Low		34		ns	
T_{ZH}	Receiver Enable to Output High		37		ns	
T_{LZ}	Receiver Disable to Output Low		55		ns	
T_{HZ}	Receiver Disable to Output High		57		ns	

Notes

[1] All currents flowing into the device pins are marked positive. All current flowing out of the device pins are marked negative. ***Bold face parameters*** *are covered by production test and guaranteed over the operating temperature range. Italicized parameters are guaranteed over the full operating temperature range.*

The product (or products) mentioned in this data sheet are no longer being manufactured and may not be ordered (OBS)

Specifications are subject to change without notice

ABSOLUTE MAXIMUM RATINGS

Storage Temperature . . . . . -65°C to +150°C
Operating Temperature . . . . . -40°C to +85°C
Supply Voltage . . . . . ±7V

SEL2	SEL1	SEL0	Drivers On	Receivers On	Description
0	0	0			All off
0	0	1		1, 2, 3	All receivers on
0	1	0	1, 2, 3	1, 2	DCE mode
0	1	1	1, 2, 3	1, 2	DCE mode with mirrored loopback
1	0	0	1, 2	1, 2, 3	DTE mode
1	0	1	1, 2	1, 2, 3	DTE mode with mirrored loopback
1	1	0	1, 2, 3	1, 2, 3	All on
1	1	1	1, 2, 3		All drivers on

Note: *The driver and receiver outputs which are not on, are placed in Hi-Z state.*

Table 1. Function Table

The product (or products) mentioned in this data sheet are no longer being manufactured and may not be ordered (OBS)

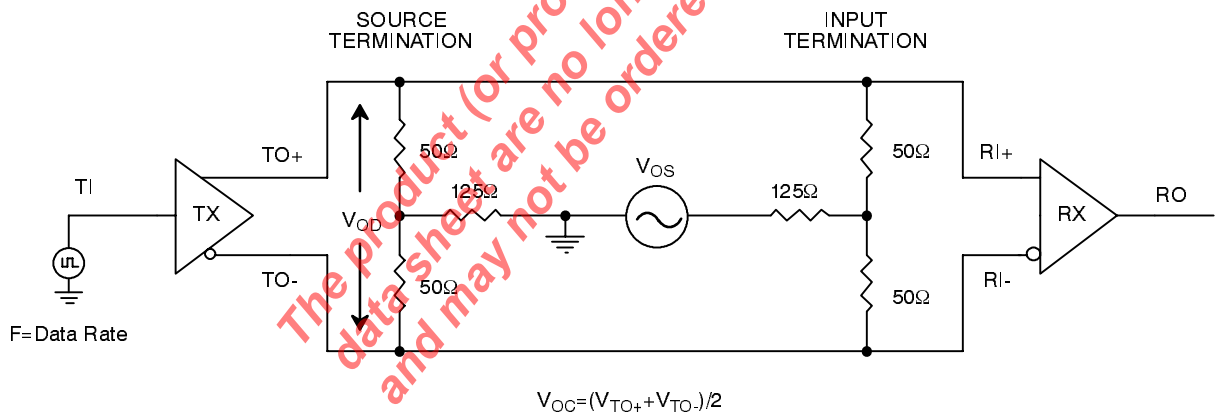

Figure 2. XR-T3590 Test Circuit

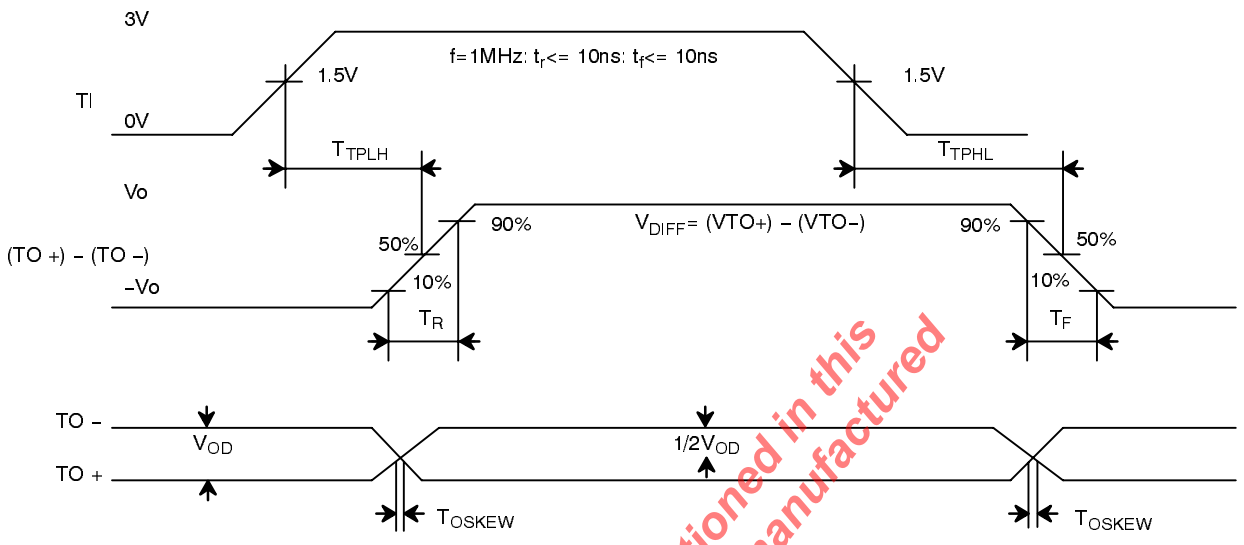

Figure 3. V.35 Transmitter Propagation Delays

The product (or products) mentioned in this data sheet are no longer being manufactured and may not be ordered (OBS)

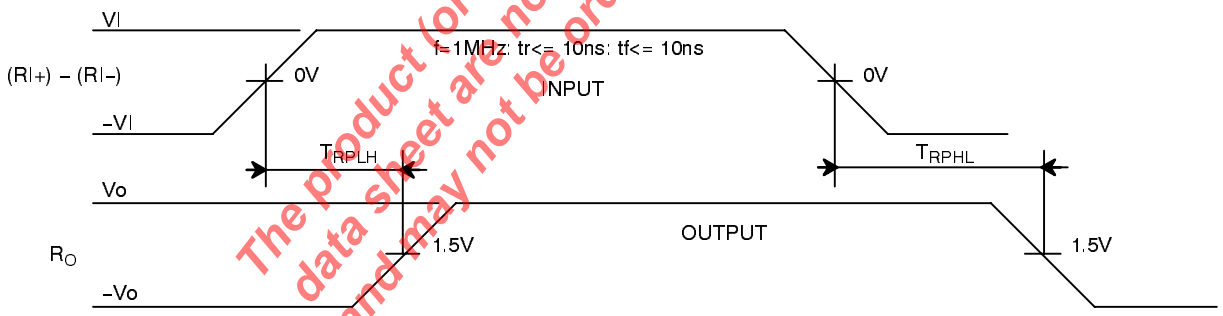

Figure 4. V.35 Receiver Propagation Delays

Cable Termination

For proper operation, the differential inputs and outputs of the XR-T3590 must be properly terminated. This is a requirement to assure full adherence to V.35 electrical signal specifications. The following diagram is a proposed termination configuration:

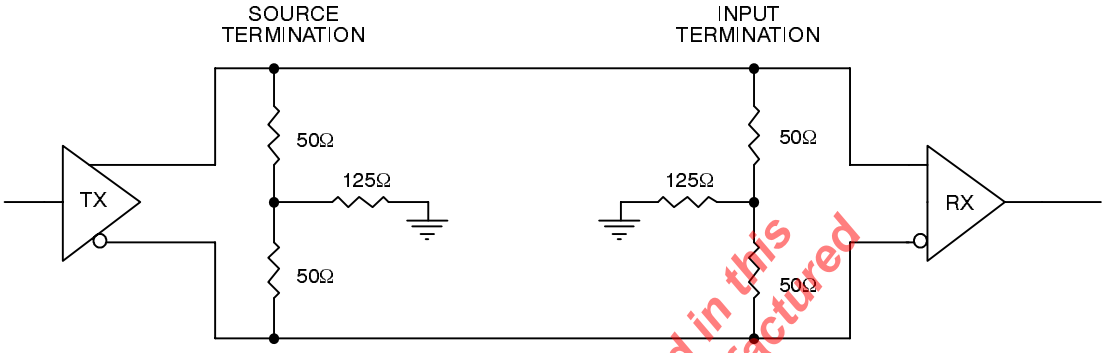

Figure 5. Proposed Source And Input Terminations

Note: *In order to implement the terminations proposed above, standard 1/8W surface mount or through hole 5% resistors can be used. Furthermore, appropriate resistor networks can be used as well.*

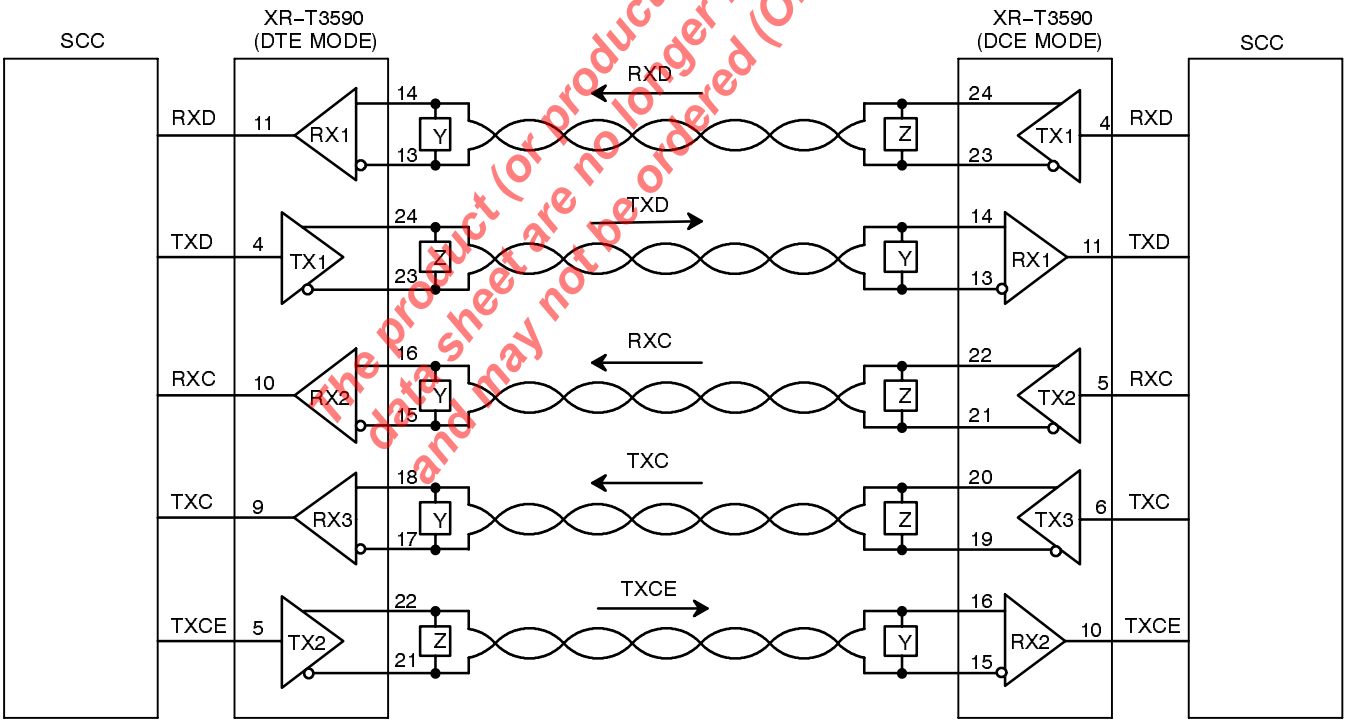

Figure 6. Typical V.35 Clock And Data Configuration

The product (or products) mentioned in this data sheet are no longer being manufactured and may not be ordered (OBS)

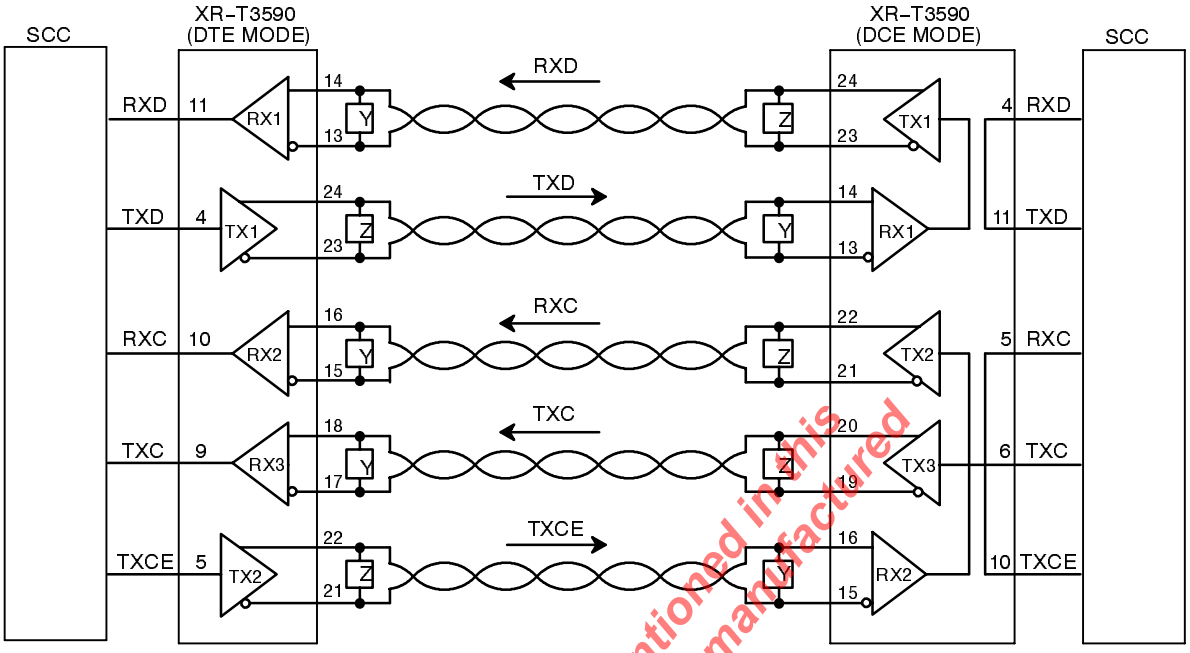

Figure 7. Typical V.35 Configuration During DCE Mirrored Loop Back

The product (or products) mentioned in this data sheet are no longer being manufactured and may not be ordered (OBS)

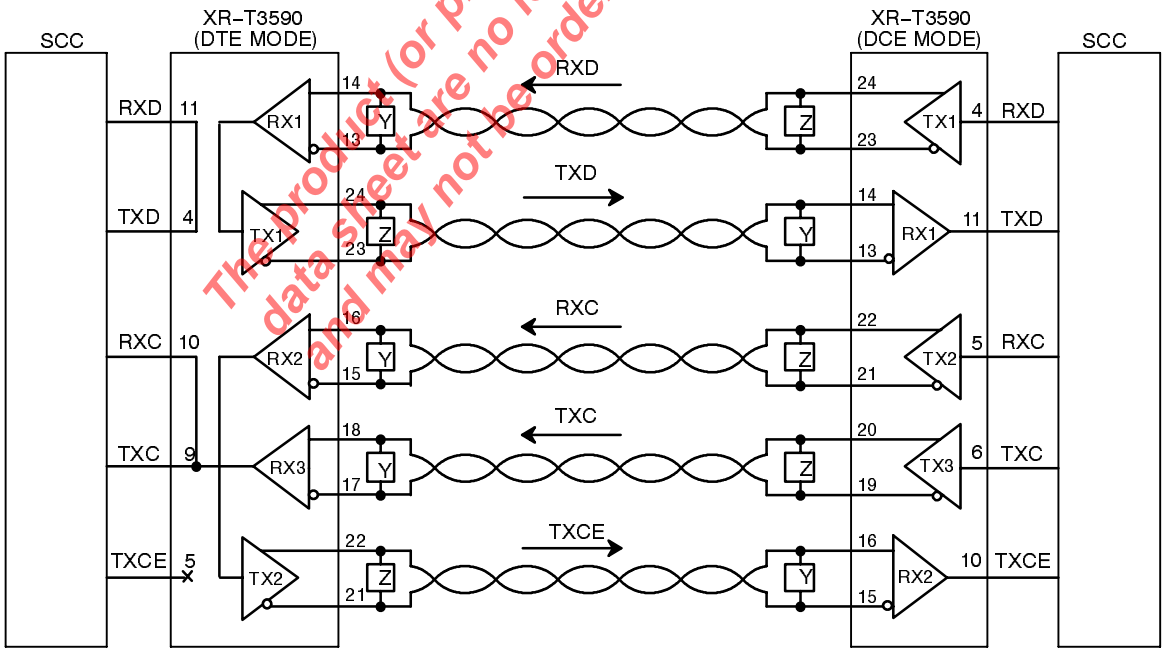

Figure 8. Typical V.35 Configuration During DTE Mirrored Loop Back

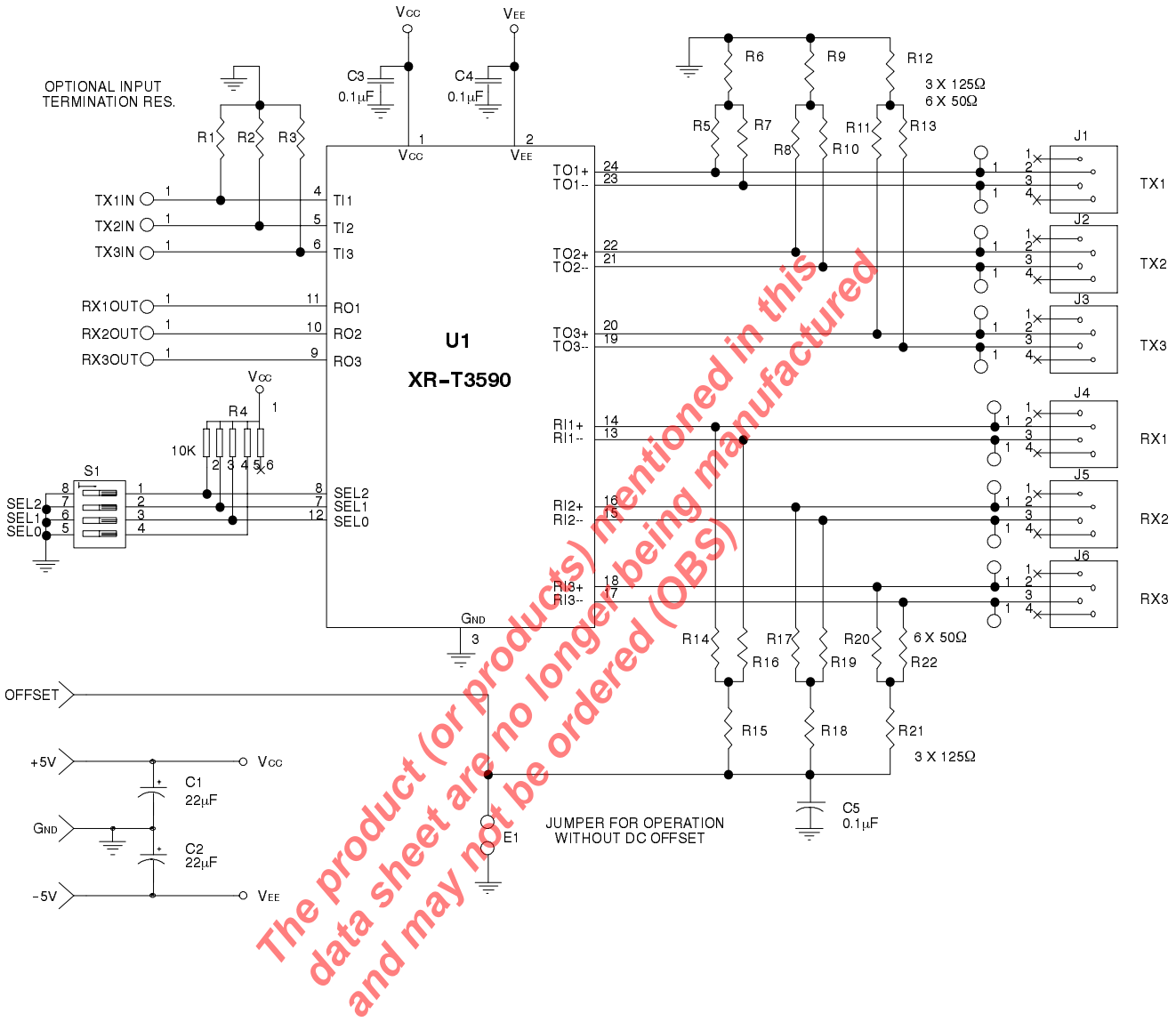

The product (or products) mentioned in this data sheet are no longer being manufactured and may not be ordered (OBS)

Figure 9. XR-T3590 Demo Board

24 LEAD PLASTIC DUAL-IN-LINE (600 MIL PDIP)

Rev. 1.00

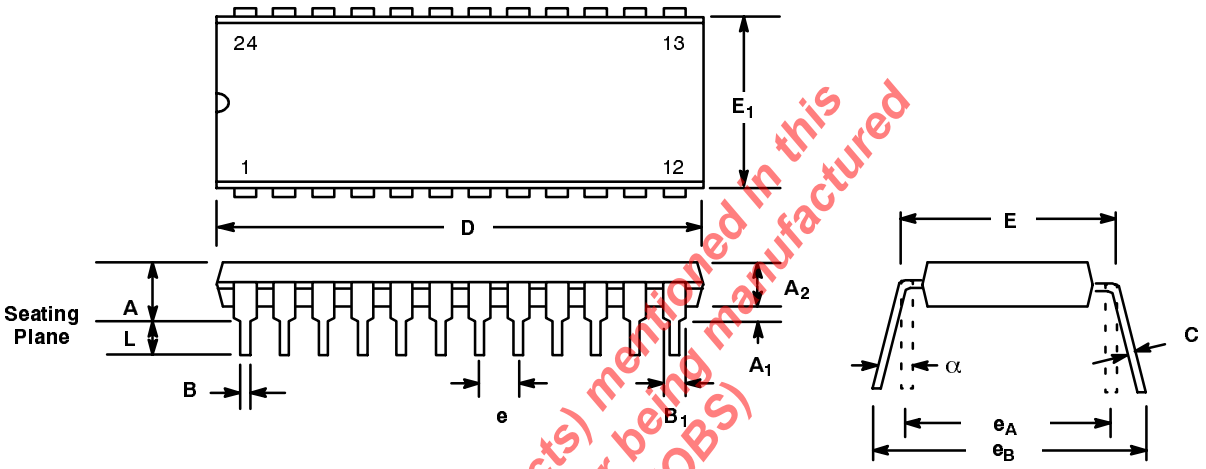

The product (or products) mentioned in this data sheet are no longer being manufactured and may not be ordered (OBS)

SYMBOL	INCHES MIN	INCHES MAX	MILLIMETERS MIN	MILLIMETERS MAX
A	0.160	0.250	4.06	6.35
A_1	0.015	0.070	0.38	1.78
A_2	0.125	0.195	3.18	4.95
B	0.014	0.024	0.36	0.56
B_1	0.030	0.070	0.76	1.78
C	0.008	0.014	0.20	0.38
D	1.150	1.290	29.21	32.77
E	0.600	0.625	15.24	15.88
E_1	0.485	0.580	12.32	14.73
e	0.100 BSC		2.54 BSC	
e_A	0.600 BSC		15.24 BSC	
e_B	0.600	0.700	15.24	17.78
L	0.115	0.200	2.92	5.08
α	0°	15°	0°	15°

Note: The control dimension is the inch column

24 LEAD SMALL OUTLINE (300 MIL JEDEC SOIC)

Rev. 1.00

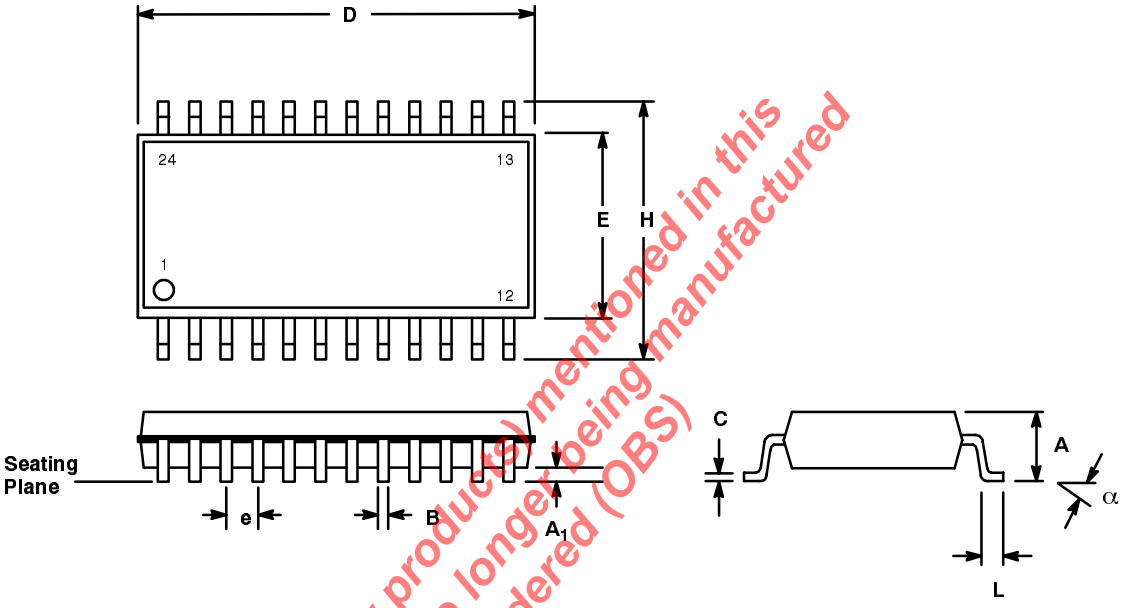

The product (or products) mentioned in this data sheet are no longer being manufactured and may not be ordered (OBS)

SYMBOL	INCHES MIN	INCHES MAX	MILLIMETERS MIN	MILLIMETERS MAX
A	0.093	0.104	2.35	2.65
A1	0.004	0.012	0.10	0.30
B	0.013	0.020	0.33	0.51
C	0.009	0.013	0.23	0.32
D	0.598	0.614	15.20	15.60
E	0.291	0.299	7.40	7.60
e	0.050 BSC		1.27 BSC	
H	0.394	0.419	10.00	10.65
L	0.016	0.050	0.40	1.27
α	0°	8°	0°	8°

Note: The control dimension is the millimeter column

Notes

The product (or products) mentioned in this data sheet are no longer being manufactured and may not be ordered (OBS)

Notes

The product (or products) mentioned in this
data sheet are no longer being manufactured
and may not be ordered (OBS)

Notes

The product (or products) mentioned in this data sheet are no longer being manufactured and may not be ordered (OBS)

The product (or products) mentioned in this data sheet are no longer being manufactured and may not be ordered (OBS)

NOTICE

EXAR Corporation reserves the right to make changes to the products contained in this publication in order to improve design, performance or reliability. EXAR Corporation assumes no responsibility for the use of any circuits described herein, conveys no license under any patent or other right, and makes no representation that the circuits are free of patent infringement. Charts and schedules contains here in are only for illustration purposes and may vary depending upon a user's specific application. While the information in this publication has been carefully checked; no responsibility, however, is assumed for inaccuracies.

EXAR Corporation does not recommend the use of any of its products in life support applications where the failure or malfunction of the product can reasonably be expected to cause failure of the life support system or to significantly affect its safety or effectiveness. Products are not authorized for use in such applications unless EXAR Corporation receives, in writing, assurances to its satisfaction that: (a) the risk of injury or damage has been minimized; (b) the user assumes all such risks; (c) potential liability of EXAR Corporation is adequately protected under the circumstances.

Copyright 1998 EXAR Corporation
Datasheet November 1998
Reproduction, in part or whole, without the prior written consent of EXAR Corporation is prohibited.